CAUTION

- **Read, understand, and follow all safety information and the following use instructions BEFORE installation and use of the system.**
- **Change the filter cartridge sets every 12 months.**

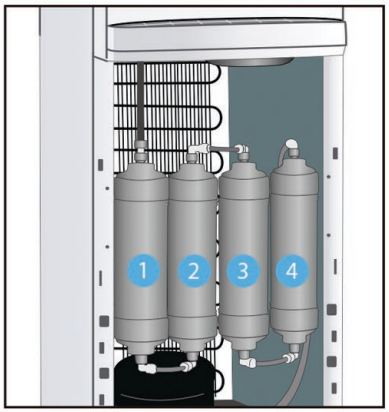

Your filters must be replaced at regular intervals to maintain optimal water quality and performance.
The first stage is the 5-micron sediment filter. The second stage is the activated carbon filter. The third stage is the Ultra Filtration Membrane. The fourth stage is Post Carbon Filter. The filter elements in all stages must be replaced every six months.

1. **TURN OFF POWER TO HOT/COLD ELEMENTS.**
2. Pull Down & Off the front bottom panel.
3. Close the saddle valve to stop water flow through the filters.
4. Place a towel under the filters to catch water. The filters will have water in them which will run out when the filters are unlocked.
5. Push the collet towards the QC fitting to remove each filter from the tubes.
6. These filters are disposable, encapsulated filters. Remove and discard the entire filter body. Replacement filters are sold as a set:
7. Connect the new filters by pushing on the QC fittings.
8. Open saddle valve and let water flow through filters. When the cooler is full, empty out the water into a bucket. This will eliminate the first batch of water, which will be full of carbon dust.
9. After the cooler fills up again, turn on the power to the cold and hot tanks. Wait a few minutes to assure there are no leaks and close the front panel.

HOW TO CONNECT A QUICK-CONNECT FITTING

Push the tubing into the Quick-Connect fitting, then gently pull back on the tubing to make sure connection was secure.

No inserts, sleeve, or nuts are needed to secure the connection.

No Teflon tape is required.

* To connect, insert the tubing 1/2 inch deep until it's sealed by O-ring and locked by spider teeth.

* To disconnect, remove blue clip, pull the tubing while pushing down the collet to release the spider.

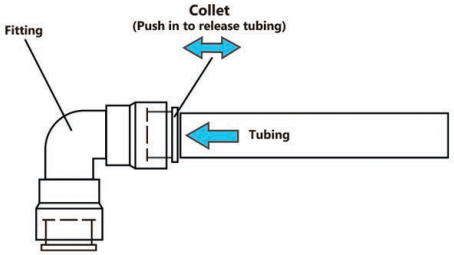

COMPATIBLE WITH
All 1/4 inch inline quick connect filtration systems

RECOMMENDED TOOLS
· 5/8", 9/16" open-end wrench, or adjustable wrench, pliers · Utility knife, or scissors · Phillips screwdriver

SAFETY INFORMATION
Read. understand. and follow all safety information contained in these instructions prior to use of the LG Model 5231 JA2006A drinking water system. Retain these instructions for future reference.

CAUTION
Improperly installed systems could result in water damage due to leaks or flooding. Proper installation of this system requires familiarity with standard sink plumbing and proper use of common hand and power tools. If you are not familiar with standard sink plumbing and proper use of common hand and power tools or have any difficulty with the installation of this system, consult a licensed professional, such as a contractor or plumber.

4 STAGE RO FILTRATION
U TYPE QUICK CONNECT FORMAT

INTERNATIONAL H2O

STAGE 1 of 4 SEDIMENT

The Sediment Filter maximizes the effect of water purification by eliminating rust, sand, silt, and pipe turbidity that is found in water supplies across the globe.

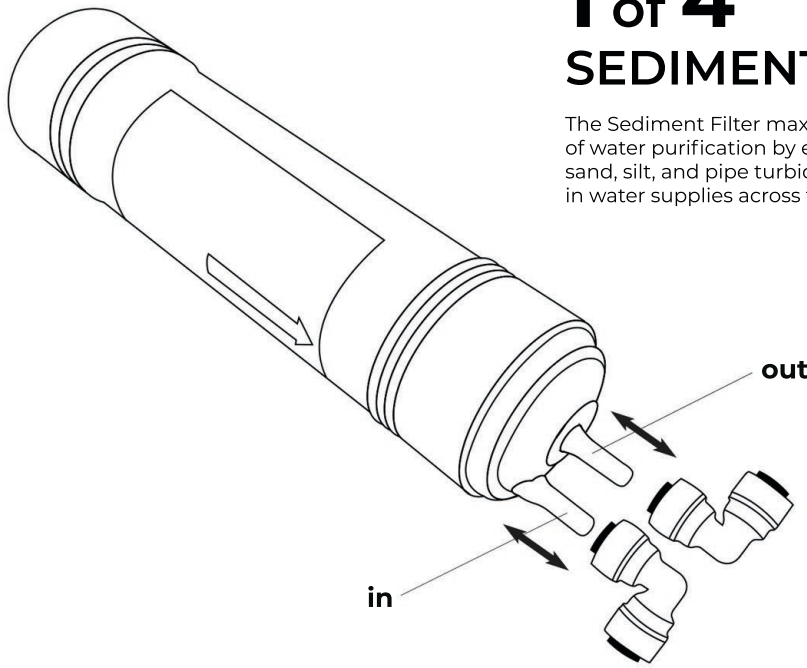

CAUTION

To reduce risk of property damage due to water leakage:
·**Read and follow** Use Instructions before installation and use of this system.

- Install on COLD water lines only.
- Comply with all state and local plumbing codes.
- Install a pressure limiting device and water hammer arrester for inlet water pressures exceeding 80 psi. (**Refer to Uniform Plumbing Code, Sections 608.2 and 609.10**)
- **Never** install or operate where inlet water pressure may exceed 120 psi (827 kPa).
- **Protect filter from freezing.** Remove filter in temperatures below 33'F (O.6'C).

Please Inspect the system and all the connection fittings carefully, make sure nothing is damaged during shipping. If any part is cracked or broken, please do not proceed with the installation and contact your distributor for an exchange or diagnosis.

WARNING

Do not use with water that is microbiologically unsafe or of unknown qualily without adequate disinfection before or after the system.

DISPOSAL

The water filter case material is HDPE (High Density Polyethylene), which food grade safe, non-toxic, non-reactive, and safe to dispose of in your standard municipal garbage service.

Your local recycling center may recycle HDPE. Please contact your municipal service for more information.

International H2O Inc
www.internationalh2o.com
+1 (888)982-8311
sales@internationalh2o.com

INTERNATIONAL H2O

CAUTION

- **Read, understand, and follow all safety information and the following use instructions BEFORE installation and use of the system.**
- **Change the filter cartridge sets every 12 months.**

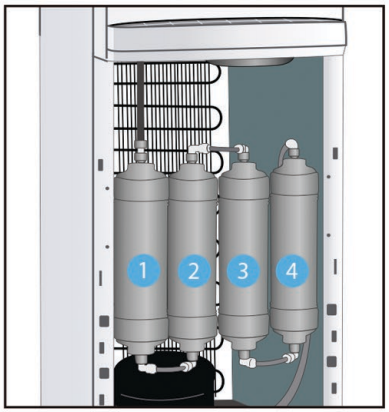

Your filters must be replaced at regular intervals to maintain optimal water quality and performance.
The first stage is the 5-micron sediment filter. The second stage is the activated carbon filter. The third stage is the Ultra Filtration Membrane. The fourth stage is Post Carbon Filter. The filter elements in all stages must be replaced every six months.

1. **TURN OFF POWER TO HOT/COLD ELEMENTS.**
2. Pull Down & Off the front bottom panel.
3. Close the saddle valve to stop water flow through the filters.
4. Place a towel under the filters to catch water. The filters will have water in them which will run out when the filters are unlocked.
5. Push the collet towards the QC fitting to remove each filter from the tubes.
6. These filters are disposable, encapsulated filters. Remove and discard the entire filter body. Replacement filters are sold as a set:
7. Connect the new filters by pushing on the QC fittings.
8. Open saddle valve and let water flow through filters. When the cooler is full, empty out the water into a bucket. This will eliminate the first batch of water, which will be full of carbon dust.
9. After the cooler fills up again, turn on the power to the cold and hot tanks. Wait a few minutes to assure there are no leaks and close the front panel.

HOW TO CONNECT A QUICK-CONNECT FITTING

Push the tubing into the Quick-Connect fitting, then gently pull back on the tubing to make sure connection was secure.

No inserts, sleeve, or nuts are needed to secure the connection.

No Teflon tape is required.

* To connect, insert the tubing 1/2 inch deep until it's sealed by O-ring and locked by spider teeth.

* To disconnect, remove blue clip, pull the tubing while pushing down the collet to release the spider.

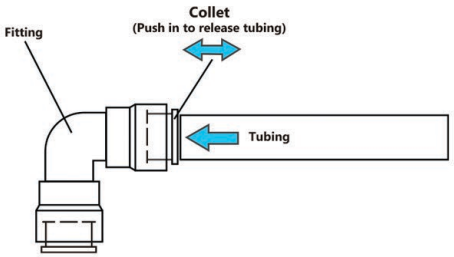

COMPATIBLE WITH
All 1/4 inch inline quick connect filtration systems

RECOMMENDED TOOLS
· 5/8", 9/16" open-end wrench, or adjustable wrench, pliers · Utility knife, or scissors · Phillips screwdriver

SAFETY INFORMATION
Read. understand. and follow all safety information contained in these instructions prior to use of the LG Model 5231 JA2006A drinking water system. Retain these instructions for future reference.

CAUTION
Improperly installed systems could result in water damage due to leaks or flooding. Proper installation of this system requires familiarity with standard sink plumbing and proper use of common hand and power tools. If you are not familiar with standard sink plumbing and proper use of common hand and power tools or have any difficulty with the installation of this system, consult a licensed professional, such as a contractor or plumber.

4 STAGE RO FILTRATION
U TYPE QUICK CONNECT FORMAT

INTERNATIONAL H2O

STAGE 2 of 4
PRE CARBON

This filter uses granulated activated carbon media from the Kuraray Carbon Company, tested and certified by the NSF. It removes chlorine, THM's, Benzene, Pesticides, Insecticides, and other contaminants that may be present in municipal water supplies.

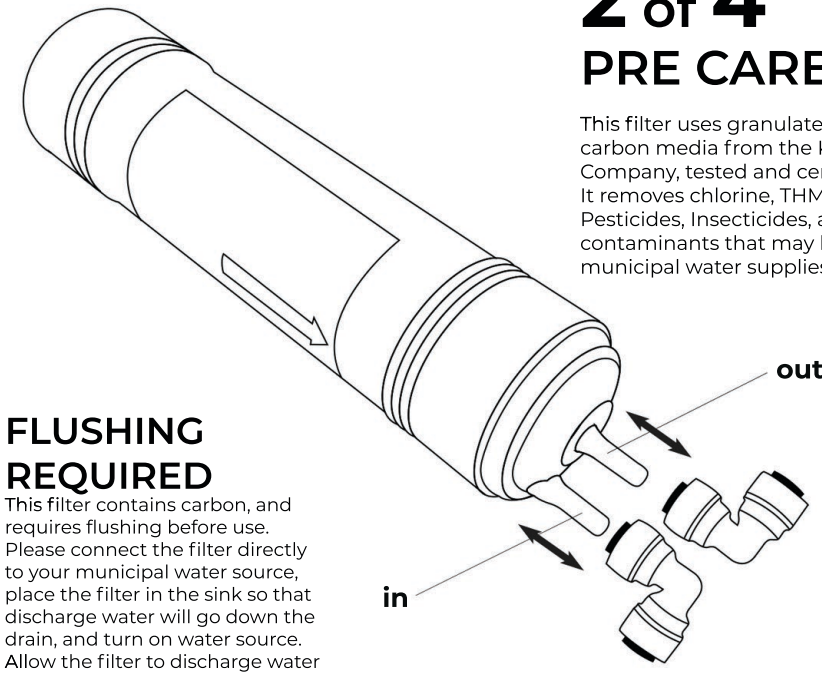

FLUSHING REQUIRED
This filter contains carbon, and requires flushing before use. Please connect the filter directly to your municipal water source, place the filter in the sink so that discharge water will go down the drain, and turn on water source. Allow the filter to discharge water and flush for at least 3-5 minutes, or until a carbon residue has been removed and water is clear again.

CAUTION

To reduce risk of property damage due to water leakage:
- **Read and follow** Use Instructions before installation and use of this system.
- Install on COLD water lines only.
- Comply with all state and local plumbing codes.
- Install a pressure limiting device and water hammer arrester for inlet water pressures exceeding 80 psi. (**Refer to Uniform Plumbing Code, Sections 608.2 and 609.10**)
- **Never** install or operate where inlet water pressure may exceed 120 psi (827 kPa).
- **Protect filter from freezing.** Remove filter in temperatures below 33'F (O.6'C).

Please Inspect the system and all the connection fittings carefully, make sure nothing is damaged during shipping. If any part is cracked or broken, please do not proceed with the installation and contact your distributor for an exchange or diagnosis.

WARNING

Do not use with water that is microbiologically unsafe or of unknown qualily without adequate disinfection before or after the system.

DISPOSAL

The water filter case material is HDPE (High Density Polyethylene), which food grade safe, non-toxic, non-reactive, and safe to dispose of in your standard municipal garbage service.

Your local recycling center may recycle HDPE. Please contact your municipal service for more information.

International H2O Inc
www.internationalh2o.com
+1 (888)982-8311
sales@internationalh2o.com

INTERNATIONAL H2O

CAUTION

- **Read, understand, and follow all safety information and the following use instructions BEFORE installation and use of the system.**
- **Change the filter cartridge sets every 12 months.**

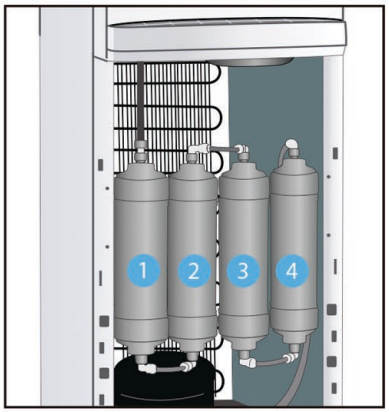

Your filters must be replaced at regular intervals to maintain optimal water quality and performance.
The first stage is the 5-micron sediment filter. The second stage is the activated carbon filter. The third stage is the Ultra Filtration Membrane. The fourth stage is Post Carbon Filter. The filter elements in all stages must be replaced every six months.

1. **TURN OFF POWER TO HOT/COLD ELEMENTS.**
2. Pull Down & Off the front bottom panel.
3. Close the saddle valve to stop water flow through the filters.
4. Place a towel under the filters to catch water. The filters will have water in them which will run out when the filters are unlocked.
5. Push the collet towards the QC fitting to remove each filter from the tubes.
6. These filters are disposable, encapsulated filters. Remove and discard the entire filter body. Replacement filters are sold as a set:
7. Connect the new filters by pushing on the QC fittings.
8. Open saddle valve and let water flow through filters. When the cooler is full, empty out the water into a bucket. This will eliminate the first batch of water, which will be full of carbon dust.
9. After the cooler fills up again, turn on the power to the cold and hot tanks. Wait a few minutes to assure there are no leaks and close the front panel.

HOW TO CONNECT A QUICK-CONNECT FITTING

Push the tubing into the Quick-Connect fitting, then gently pull back on the tubing to make sure connection was secure.

No inserts, sleeve, or nuts are needed to secure the connection.

No Teflon tape is required.

* To connect, insert the tubing 1/2 inch deep until it's sealed by O-ring and locked by spider teeth.

* To disconnect, remove blue clip, pull the tubing while pushing down the collet to release the spider.

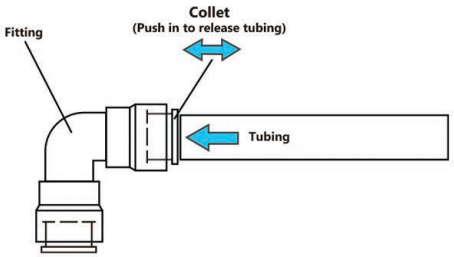

COMPATIBLE WITH
All 1/4 inch inline quick connect filtration systems

RECOMMENDED TOOLS
· 5/8", 9/16" open-end wrench, or adjustable wrench, pliers · Utility knife, or scissors · Phillips screwdriver

SAFETY INFORMATION
Read. understand. and follow all safety information contained in these instructions prior to use of the LG Model 5231 JA2006A drinking water system. Retain these instructions for future reference.

CAUTION
Improperly installed systems could result in water damage due to leaks or flooding. Proper installation of this system requires familiarity with standard sink plumbing and proper use of common hand and power tools. If you are not familiar with standard sink plumbing and proper use of common hand and power tools or have any difficulty with the installation of this system, consult a licensed professional, such as a contractor or plumber.

4 STAGE RO FILTRATION
U-TYPE QUICK CONNECT FORMAT

INTERNATIONAL H2O

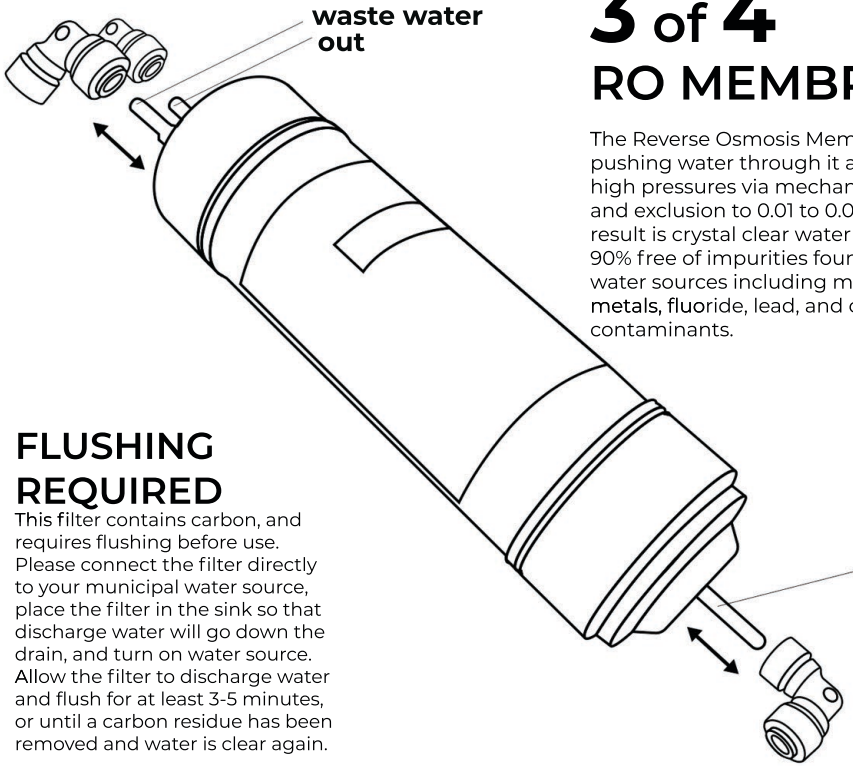

STAGE 3 of 4
RO MEMBRANE

The Reverse Osmosis Membrane works by pushing water through it at extremely high pressures via mechanical sieving and exclusion to 0.01 to 0.02 microns. The result is crystal clear water that is over 90% free of impurities found in municipal water sources including minerals, heavy metals, fluoride, lead, and organic contaminants.

FLUSHING REQUIRED
This filter contains carbon, and requires flushing before use. Please connect the filter directly to your municipal water source, place the filter in the sink so that discharge water will go down the drain, and turn on water source. Allow the filter to discharge water and flush for at least 3-5 minutes, or until a carbon residue has been removed and water is clear again.

CAUTION

To reduce risk of property damage due to water leakage:
- **Read and follow** Use Instructions before installation and use of this system.
- Install on COLD water lines only.
- Comply with all state and local plumbing codes.
- Install a pressure limiting device and water hammer arrester for inlet water pressures exceeding 80 psi. (**Refer to Uniform Plumbing Code, Sections 608.2 and 609.10**)
- **Never** install or operate where inlet water pressure may exceed 120 psi (827 kPa).
- **Protect filter from freezing.** Remove filter in temperatures below 33'F (O.6'C).

Please Inspect the system and all the connection fittings carefully, make sure nothing is damaged during shipping. If any part is cracked or broken, please do not proceed with the installation and contact your distributor for an exchange or diagnosis.

WARNING

Do not use with water that is microbiologically unsafe or of unknown qualily without adequate disinfection before or after the system.

DISPOSAL

The water filter case material is HDPE (High Density Polyethylene), which food grade safe, non-toxic, non-reactive, and safe to dispose of in your standard municipal garbage service.

Your local recycling center may recycle HDPE. Please contact your municipal service for more information.

International H2O Inc
www.internationalh2o.com
+1 (888)982-8311
sales@internationalh2o.com

INTERNATIONAL H2O

CAUTION

- **Read, understand, and follow all safety information and the following use instructions BEFORE installation and use of the system.**
- **Change the filter cartridge sets every 12 months.**

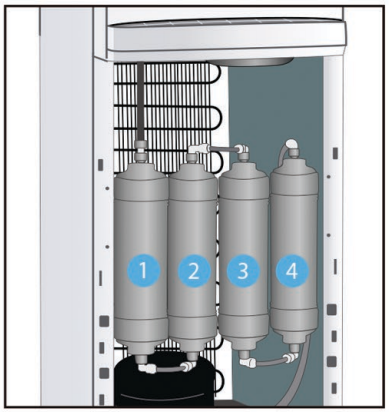

Your filters must be replaced at regular intervals to maintain optimal water quality and performance.
The first stage is the 5-micron sediment filter. The second stage is the activated carbon filter. The third stage is the Ultra Filtration Membrane. The fourth stage is Post Carbon Filter. The filter elements in all stages must be replaced every six months.

1. **TURN OFF POWER TO HOT/COLD ELEMENTS.**
2. Pull Down & Off the front bottom panel.
3. Close the saddle valve to stop water flow through the filters.
4. Place a towel under the filters to catch water. The filters will have water in them which will run out when the filters are unlocked.
5. Push the collet towards the QC fitting to remove each filter from the tubes.
6. These filters are disposable, encapsulated filters. Remove and discard the entire filter body. Replacement filters are sold as a set:
7. Connect the new filters by pushing on the QC fittings.
8. Open saddle valve and let water flow through filters. When the cooler is full, empty out the water into a bucket. This will eliminate the first batch of water, which will be full of carbon dust.
9. After the cooler fills up again, turn on the power to the cold and hot tanks. Wait a few minutes to assure there are no leaks and close the front panel.

HOW TO CONNECT A QUICK-CONNECT FITTING

Push the tubing into the Quick-Connect fitting, then gently pull back on the tubing to make sure connection was secure.

No inserts, sleeve, or nuts are needed to secure the connection.

No Teflon tape is required.

* To connect, insert the tubing 1/2 inch deep until it's sealed by O-ring and locked by spider teeth.

* To disconnect, remove blue clip, pull the tubing while pushing down the collet to release the spider.

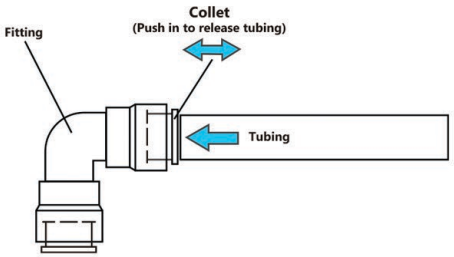

COMPATIBLE WITH
All 1/4 inch inline quick connect filtration systems

RECOMMENDED TOOLS
· 5/8", 9/16" open-end wrench, or adjustable wrench, pliers · Utility knife, or scissors · Phillips screwdriver

SAFETY INFORMATION
Read. understand. and follow all safety information contained in these instructions prior to use of the LG Model 5231 JA2006A drinking water system. Retain these instructions for future reference.

CAUTION
Improperly installed systems could result in water damage due to leaks or flooding. Proper installation of this system requires familiarity with standard sink plumbing and proper use of common hand and power tools. If you are not familiar with standard sink plumbing and proper use of common hand and power tools or have any difficulty with the installation of this system, consult a licensed professional, such as a contractor or plumber.

4 STAGE RO FILTRATION
U TYPE QUICK CONNECT FORMAT

INTERNATIONAL H2O

STAGE 4 of 4
POST CARBON

This filter utilizes proprietary carbon block technology to significantly reduce chlorine, lead, and other impurities. It also provides a "polishing" effect, giving the water a crisp and delicious taste.

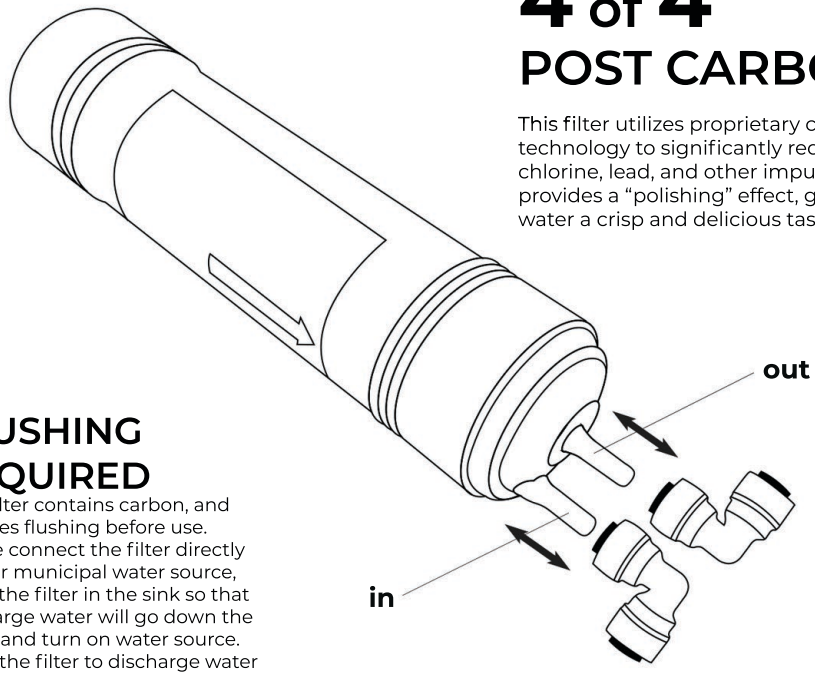

FLUSHING REQUIRED
This filter contains carbon, and requires flushing before use. Please connect the filter directly to your municipal water source, place the filter in the sink so that discharge water will go down the drain, and turn on water source. Allow the filter to discharge water and flush for at least 3-5 minutes, or until a carbon residue has been removed and water is clear again.

CAUTION

To reduce risk of property damage due to water leakage:
·**Read and follow** Use Instructions before installation and use of this system.

• Install on COLD water lines only.

• Comply with all state and local plumbing codes.

• Install a pressure limiting device and water hammer arrester for inlet water pressures exceeding 80 psi. (**Refer to Uniform Plumbing Code, Sections 608.2 and 609.10**)

• **Never** install or operate where inlet water pressure may exceed 120 psi (827 kPa).

• **Protect filter from freezing.** Remove filter in temperatures below 33'F (O.6'C).

Please Inspect the system and all the connection fittings carefully, make sure nothing is damaged during shipping. If any part is cracked or broken, please do not proceed with the installation and contact your distributor for an exchange or diagnosis.

WARNING

Do not use with water that is microbiologically unsafe or of unknown qualily without adequate disinfection before or after the system.

DISPOSAL

The water filter case material is HDPE (High Density Polyethylene), which food grade safe, non-toxic, non-reactive, and safe to dispose of in your standard municipal garbage service.

Your local recycling center may recycle HDPE. Please contact your municipal service for more information.

International H2O Inc
www.internationalh2o.com
+1 (888)982-8311
sales@internationalh2o.com

INTERNATIONAL H2O